Distributed By
Rosenberger
Rosenberger Site Solutions, LLC
visit www.RosenbergerOnline.us

C10857807 12' HD V-BOOM ASSEMBLY W/TIEBACK				
ITEM	QTY.	PART NO.	DESCRIPTION	WEIGHT
1.	1	C10857001C	12' HD V-BOOM ASSEMBLY W/TIE BACK	462
2.	1	C10899050	4 1/2" O.D. MONOPOLE PIPE MOUNT ASSEMBLY	678
			TOTAL WEIGHT	1140

NOTES:

1. MOUNTING PIPES & CROSSOVER PLATE KITS MUST BE PURCHASED SEPARATELY.
2. SEE DRAWING C10857001C FOR 12' V-BOOM ASSEMBLY.
3. SEE DRAWING C10899050 FOR 4 1/2" O.D. MONOPOLE PIPE MOUNT ASSEMBLY.

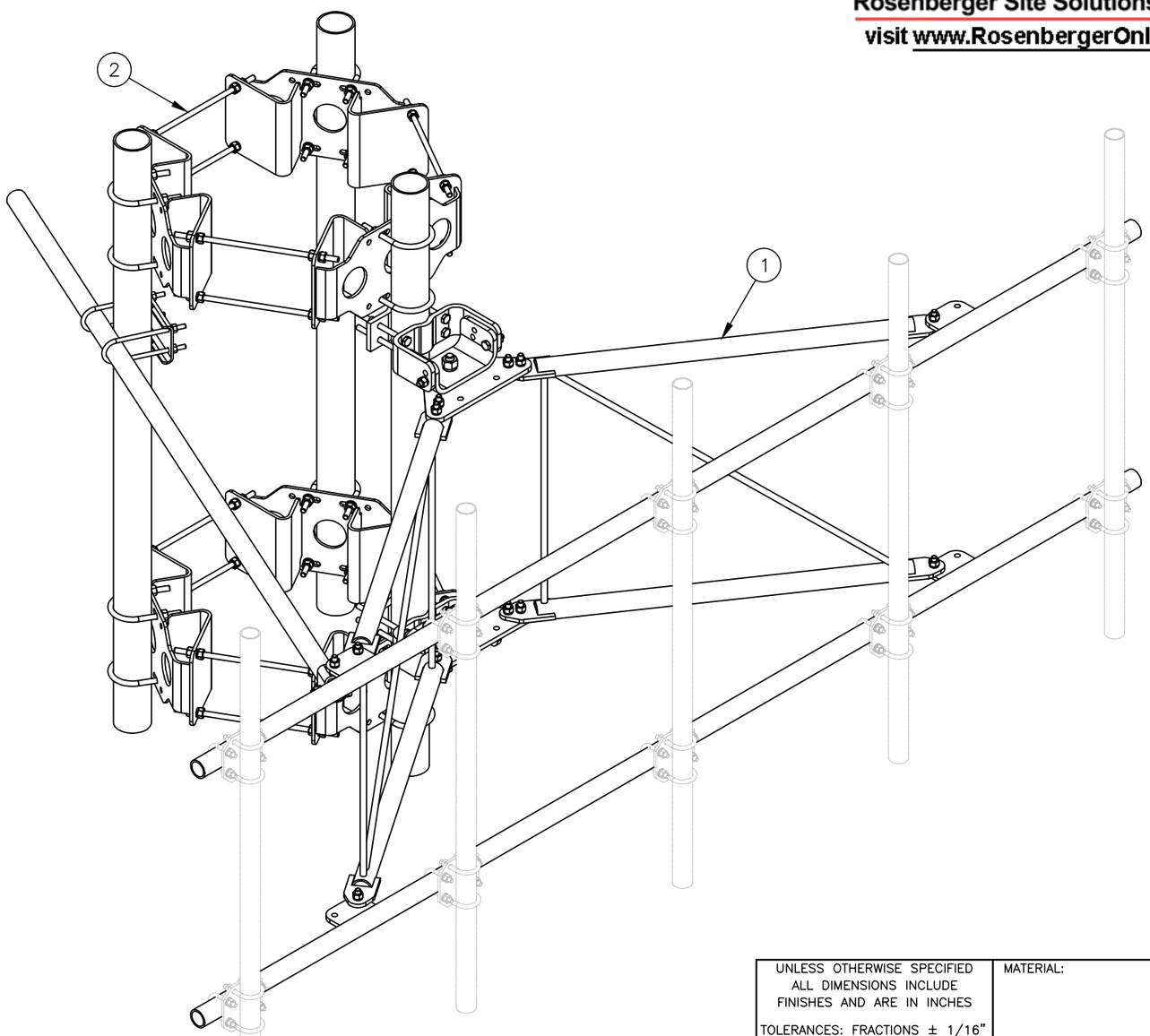

ISOMETRIC VIEW

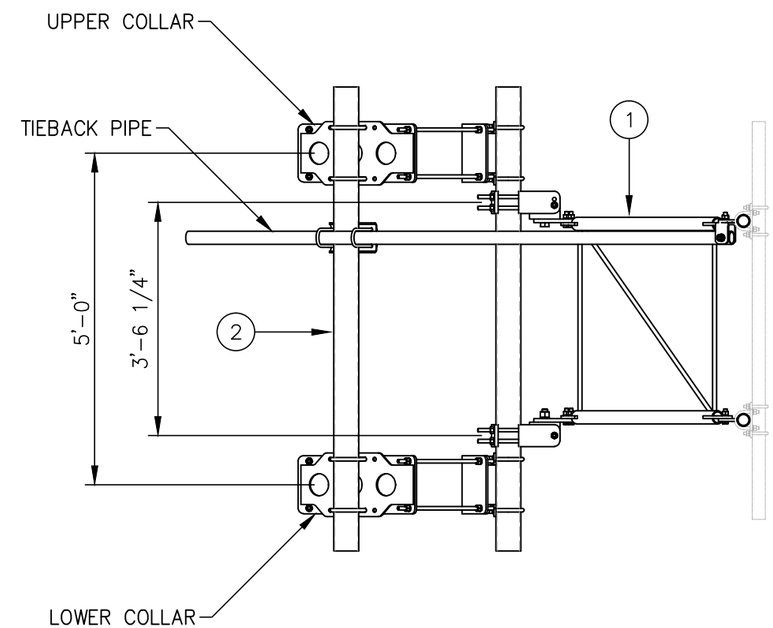

VIEW A-A
FROM PAGE 2

UNLESS OTHERWISE SPECIFIED ALL DIMENSIONS INCLUDE FINISHES AND ARE IN INCHES

TOLERANCES: FRACTIONS ± 1/16"
ANGLES ± 1/2 DEG.
DECIMALS ± .010"

MATERIAL:

TOLERANCES DO NOT APPLY TO RAW MATERIAL

REV	DATE	DRW	CHK	DESCRIPTION

Sabre Industries™
Towers and Poles

CONFIDENTIAL
This document and the information contained herein is the confidential trade secret property of Sabre Communications Corporation ("Sabre") and must not be reproduced, copied or used, in whole or in part, for any purpose without the prior written consent of Sabre.
© 2018 Sabre Communications Corporation. All rights reserved.

12' HD V-BOOM ASSEMBLY W/TIEBACK
(3' STANDOFF)
ON MONOPOLE PIPE MOUNT ASSEMBLY
W/NO ANTENNA MOUNTING PIPES

		SIZE	DRAWING NO.	REV
DATE	09/24/18	B	C10857807	0
DRAWN BY	WRF			
CHECKED BY	WMN		SCALE None	PAGE 1 OF 2

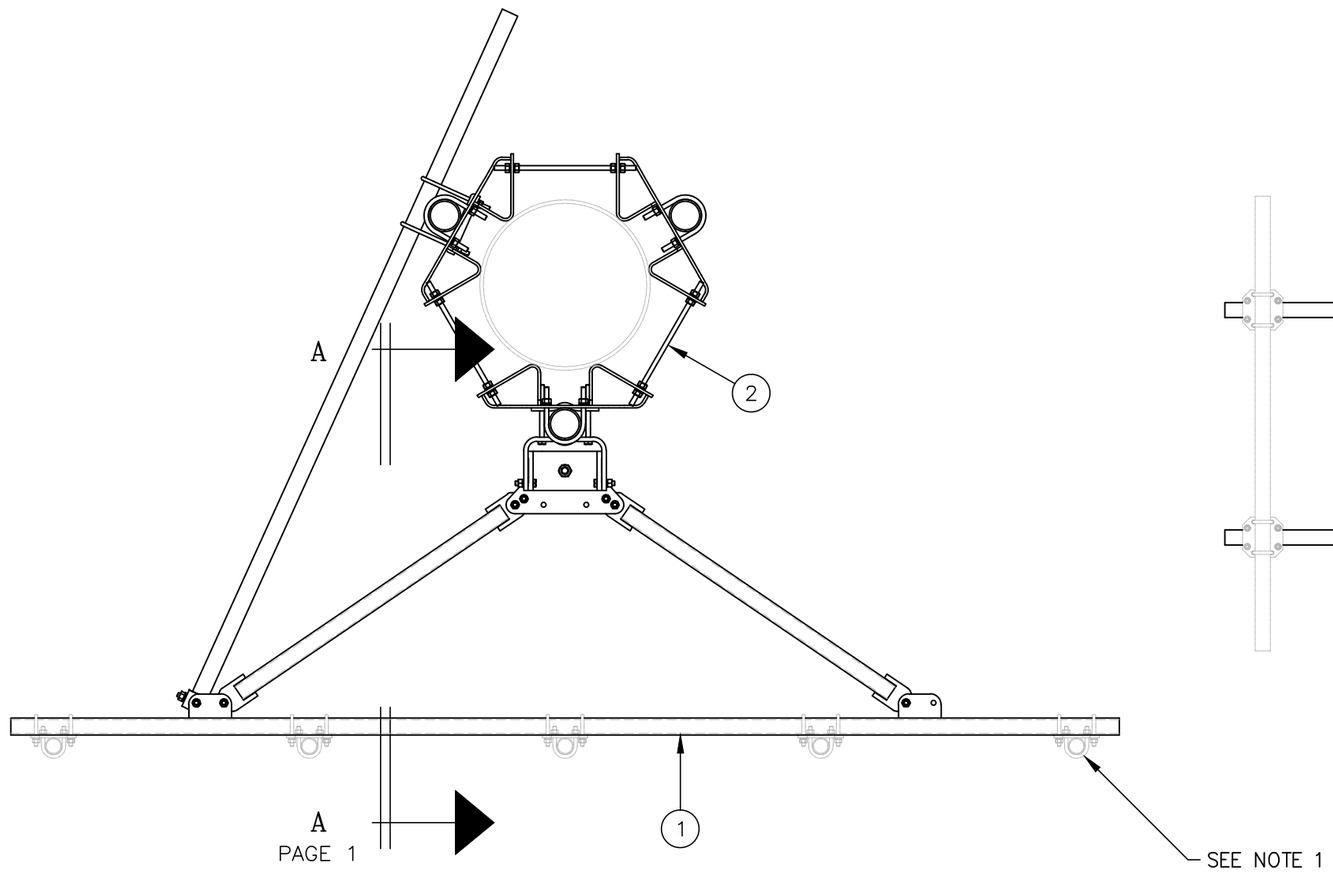

PLAN VIEW

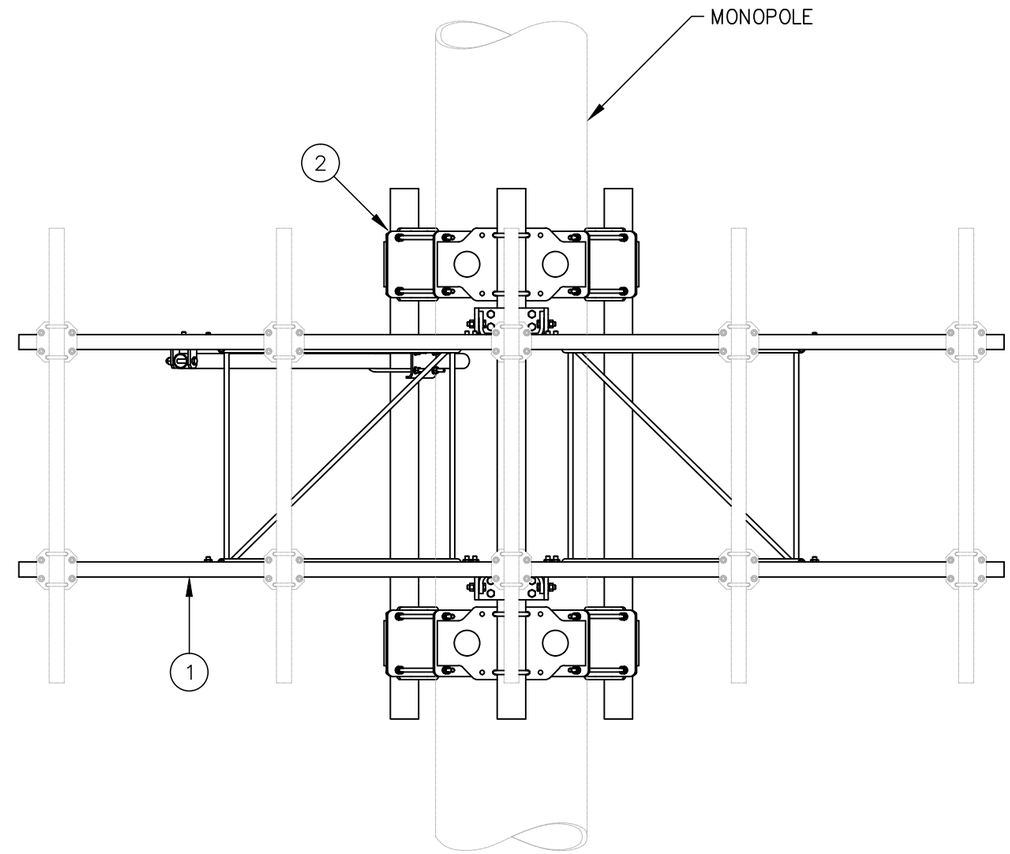

ELEVATION VIEW

UNLESS OTHERWISE SPECIFIED
ALL DIMENSIONS INCLUDE
FINISHES AND ARE IN INCHES

TOLERANCES: FRACTIONS ± 1/16"
ANGLES ± 1/2 DEG.
DECIMALS ± .010"

MATERIAL:

TOLERANCES DO NOT APPLY
TO RAW MATERIAL

REV	DATE	DRW	CHK	DESCRIPTION

Sabre Industries™
Towers and Poles

CONFIDENTIAL

This document and the information contained herein is the confidential trade secret property of Sabre Communications Corporation ("Sabre") and must not be reproduced, copied or used, in whole or in part, for any purpose without the prior written consent of Sabre.
© 2018 Sabre Communications Corporation. All rights reserved.

12' HD V-BOOM ASSEMBLY W/TIEBACK (3' STANDOFF) ON MONOPOLE PIPE MOUNT ASSEMBLY W/NO ANTENNA MOUNTING PIPES

		SIZE	DRAWING NO.	REV
DATE	09/24/18	B	C10857807	0
DRAWN BY	WRF			
CHECKED BY	WMN		SCALE None	PAGE 2 OF 2

TIEBACK ANGLE RANGE DETAIL

+/- 15 DEGREES VERTICAL
+/- 25 DEGREES HORIZONTAL

+15 DEGREES
-25 DEGREES +25 DEGREES
-15 DEGREES

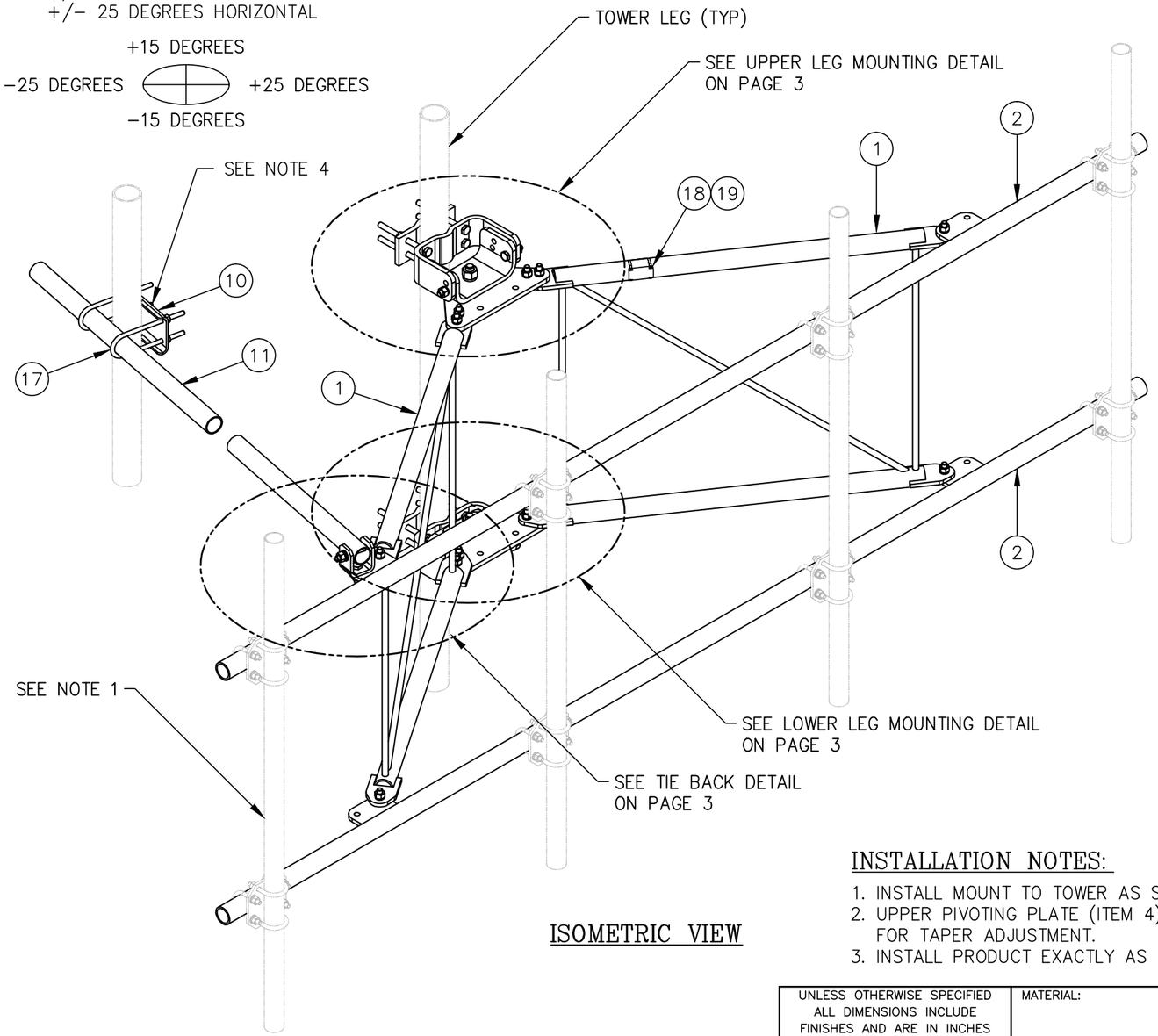

ISOMETRIC VIEW

C10857001C 12' HD V-BOOM ASSEMBLY W/TIEBACK

ITEM	QTY.	PART NO.	DESCRIPTION	WEIGHT
1.	2	CW01222	WELDMENT, STANDOFF ARM	126
2.	2	CW01223	WELDMENT, FACE PIPE	147
3.	2	CS03109	PLATE, ROTATING	34
4.	1	CS03110	PLATE, PIVOTING (UPPER)	16
5.	1	CS03111	PLATE, LEG CLAMP (UPPER)	17
6.	1	CS03112	PLATE, PIVOTING (LOWER)	14
7.	1	CS03113	PLATE, LEG CLAMP (LOWER)	17
8.	2	CS03114	PLATE, LEG CLAMP (BACK)	14
9.	1	CS00098	PLATE, TIE BACK SWIVEL	3
10.	1	CS03285	PLATE, TIE BACK CLAMP	4
11.	1	CS03333	PIPE, TIE BACK	38
12.	2	C40026073	BOLT ASSEMBLY, 1 ø X 3 A325	4
13.	8	C40140004	BOLT ASSEMBLY, 5/8 ø X 8 A307	13
14.	1	C40026033	BOLT ASSEMBLY, 5/8 ø X 4 1/2 A325	1
15.	12	C40026025	BOLT ASSEMBLY, 5/8 ø X 2 1/2 A325	6
16.	5	C40026024	BOLT ASSEMBLY, 5/8 ø X 2 1/4 A325	3
17.	2	C40034183	U-BOLT ASSEMBLY, 1/2 ø X 2 15/16 C-C	3
18.	1	Z30992001	MOUNT CLASSIFICATION TAG C10857001C	1
19.	2	C40062103	STAINLESS STEEL SELF-LOCKING CABLE TIE	1
			TOTAL WEIGHT	462

PACKAGING NOTE

CK00386 INCLUDES ITEMS 1, 3, 4, 5, 6, 7, 12 & 15 (8 QTY)
CK00387-HDW INCLUDES ITEMS 8, 9, 10, 13, 14, 15 (4 QTY), 16, 17, 18 & 19
CK00387-STL INCLUDES ITEMS 2 & 11

INSTALLATION NOTES:

1. INSTALL MOUNT TO TOWER AS SHOWN, SO THAT WELDED STANDOFF DIAGONAL IS SLOPING DOWNWARD FROM TOWER END TO FACE PIPE END.
2. UPPER PIVOTING PLATE (ITEM 4) HAS THREE HOLES ON EACH SIDE AND UPPER LEG CLAMP PLATE (ITEM 5) HAS TWO HOLES ON EACH SIDE FOR TAPER ADJUSTMENT.
3. INSTALL PRODUCT EXACTLY AS SHOWN IN DRAWING, WITH ALL BOLTS FACING UPWARDS.

NOTES:

1. MOUNTING PIPES & CROSSOVER PLATE KITS MUST BE PURCHASED SEPARATELY.
2. QUANTITIES SHOWN IN LISTS OF MATERIAL ARE FOR ONE (1) V-BOOM ONLY.
3. THIS V-BOOM WILL MOUNT TO THE FOLLOWING: 1 1/2"ø TO 5 9/16"ø ROUND LEG.
4. TIEBACK MUST BE CONNECTED TO A RIGID MEMBER THAT PROVIDES ADEQUATE SUPPORT WITHIN THE LIMITS NOTED ABOVE IN THE TIEBACK ANGLE RANGE DETAIL UNLESS APPROVED BY THE ENGINEER OF RECORD.

UNLESS OTHERWISE SPECIFIED ALL DIMENSIONS INCLUDE FINISHES AND ARE IN INCHES
TOLERANCES: FRACTIONS ± 1/16" ANGLES ± 1/2 DEG. DECIMALS ± .010"

MATERIAL:
TOLERANCES DO NOT APPLY TO RAW MATERIAL

REV	DATE	DRW	CHK	DESCRIPTION
4	04/11/17	KLE	EK	REVISED PACKAGING NOTE
3	10/19/16	KLE	DEL	ADDED INSTALLATION NOTES
2	02/05/16	DLW	DEL	ADDED PACKAGING NOTE
1	01/21/16	KLE	EK	REVISED NOTES & ADDED TIEBACK ANGLE RANGE DETAIL

Sabre Industries™
Towers and Poles

CONFIDENTIAL
This document and the information contained herein is the confidential trade secret property of Sabre Communications Corporation ("Sabre") and must not be reproduced, copied or used, in whole or in part, for any purpose without the prior written consent of Sabre.
© 2015 Sabre Communications Corporation. All rights reserved.

12' HD V-BOOM ASSEMBLY W/TIEBACK
(3' STANDOFF)
W/NO ANTENNA MOUNTING PIPES

		SIZE	DRAWING NO.	REV
DATE	12/22/15	B	C10857001C	4
DRAWN BY	WRF			
CHECKED BY	EK		SCALE None	PAGE 1 OF 3

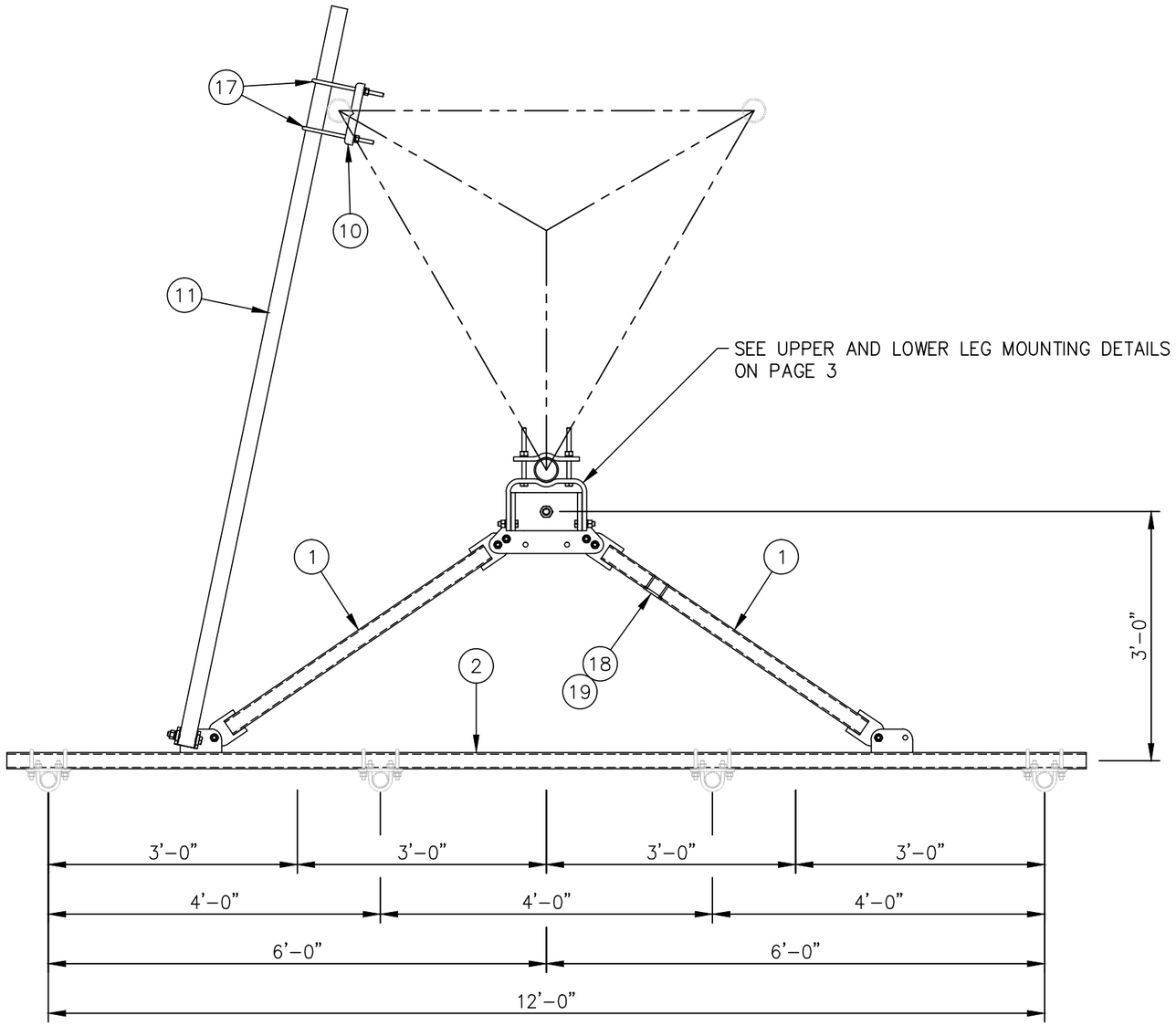

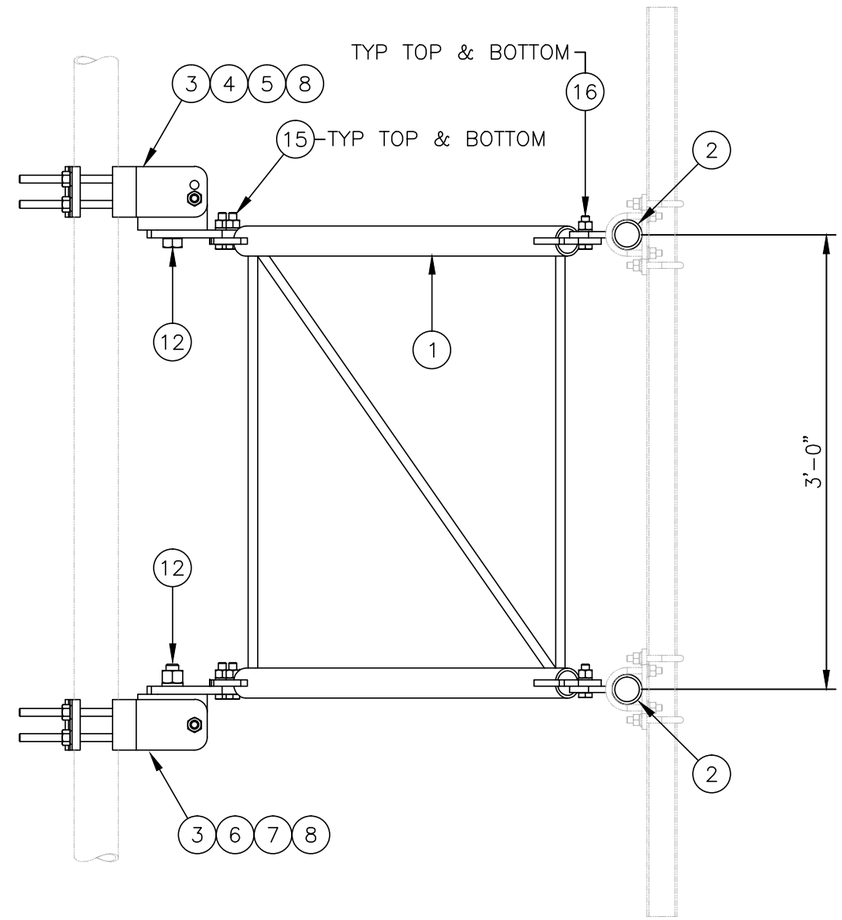

SIDE VIEW

MOUNTING OPTIONS

SHOWING MOUNTING PIPE PLACEMENTS

UNLESS OTHERWISE SPECIFIED
ALL DIMENSIONS INCLUDE
FINISHES AND ARE IN INCHES

TOLERANCES: FRACTIONS ± 1/16"
ANGLES ± 1/2 DEG.
DECIMALS ± .010"

MATERIAL:

TOLERANCES DO NOT APPLY
TO RAW MATERIAL

REV	DATE	DRW	CHK	DESCRIPTION
4	04/11/17	KLE	EK	REVISED PACKAGING NOTE
3	10/19/16	KLE	DEL	ADDED INSTALLATION NOTES
2	02/05/16	DLW	DEL	ADDED PACKAGING NOTE
1	01/21/16	KLE	EK	REVISED NOTES & ADDED TIEBACK ANGLE RANGE DETAIL

Sabre Industries™
Towers and Poles

CONFIDENTIAL

This document and the information contained herein is the confidential trade secret property of Sabre Communications Corporation ("Sabre") and must not be reproduced, copied or used, in whole or in part, for any purpose without the prior written consent of Sabre.
© 2015 Sabre Communications Corporation. All rights reserved.

12' HD V-BOOM ASSEMBLY W/TIEBACK (3' STANDOFF) W/NO ANTENNA MOUNTING PIPES

		SIZE	DRAWING NO.	REV
DATE	12/22/15	B	C10857001C	4
DRAWN BY	WRF			
CHECKED BY	EK		SCALE None	PAGE 2 OF 3

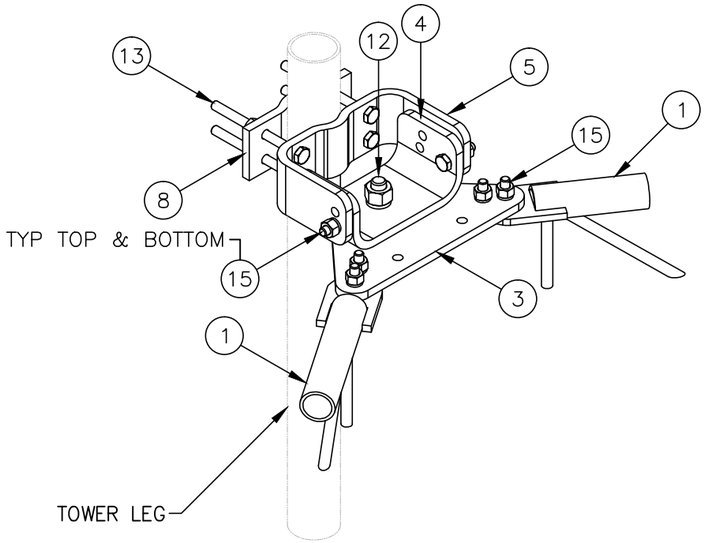

UPPER LEG MOUNTING DETAIL

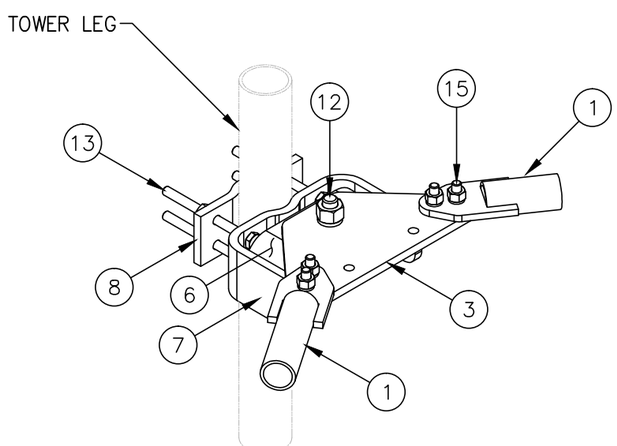

LOWER LEG MOUNTING DETAIL

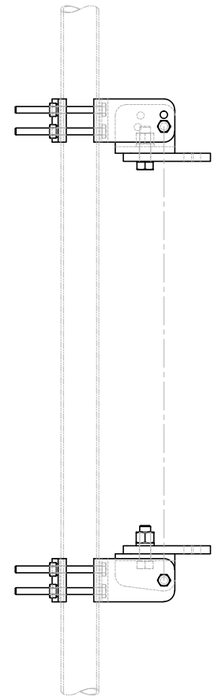

STRAIGHT
TOWER SECTION

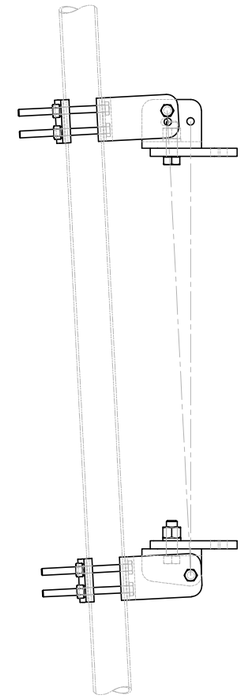

TAPERED
1'–9 IN 20' SLOPE

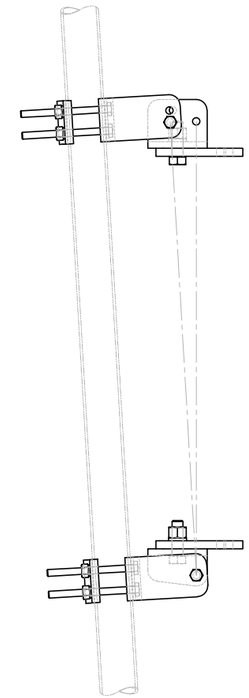

TAPERED
2' IN 20' SLOPE

-------PIVOTING OPTIONS-------

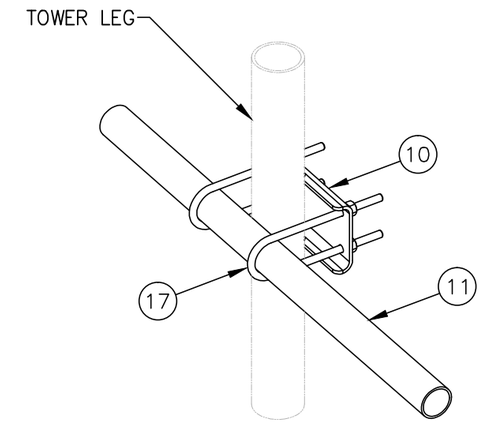

TIE BACK DETAIL
AT TOWER LEG

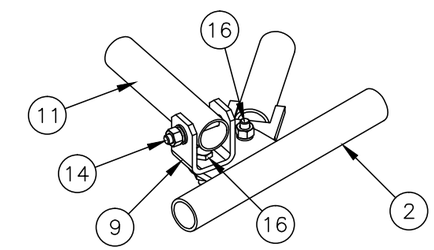

TIE BACK DETAIL
AT ANTENNA MOUNTING FRAME

UNLESS OTHERWISE SPECIFIED
ALL DIMENSIONS INCLUDE
FINISHES AND ARE IN INCHES

TOLERANCES: FRACTIONS ± 1/16"
ANGLES ± 1/2 DEG.
DECIMALS ± .010"

MATERIAL:

TOLERANCES DO NOT APPLY
TO RAW MATERIAL

REV	DATE	DRW	CHK	DESCRIPTION
4	04/11/17	KLE	EK	REVISED PACKAGING NOTE
3	10/19/16	KLE	DEL	ADDED INSTALLATION NOTES
2	02/05/16	DLW	DEL	ADDED PACKAGING NOTE
1	01/21/16	KLE	EK	REVISED NOTES & ADDED TIEBACK ANGLE RANGE DETAIL

Sabre Industries™
Towers and Poles

CONFIDENTIAL

This document and the information contained herein is the confidential trade secret property of Sabre Communications Corporation ("Sabre") and must not be reproduced, copied or used, in whole or in part, for any purpose without the prior written consent of Sabre.
© 2015 Sabre Communications Corporation. All rights reserved.

12' HD V–BOOM ASSEMBLY W/TIEBACK (3' STANDOFF) W/NO ANTENNA MOUNTING PIPES

		SIZE	DRAWING NO.	REV
DATE	12/22/15	B	C10857001C	4
DRAWN BY	WRF			
CHECKED BY	EK		SCALE None	PAGE 3 OF 3

NOTE:

SEE DRAWING C10112377 FOR INSTALLATION OF TRI-COLLAR BRACKET ASSEMBLY

C10899050 4 1/2" O.D. PIPE MOUNT ASSEMBLY				
ITEM	QTY.	PART NO.	DESCRIPTION	WEIGHT
1.	2	C10112377	TRI-COLLAR BRACKET ASSEMBLY	416
2.	3	C10901407	PIPE, 4 1/2 O.D. X .237 X 7'-0	236
3.	12	C40034032	U-BOLT ASSEMBLY, 5/8 ø X 5 3/16 C-C	26
			TOTAL WEIGHT	678

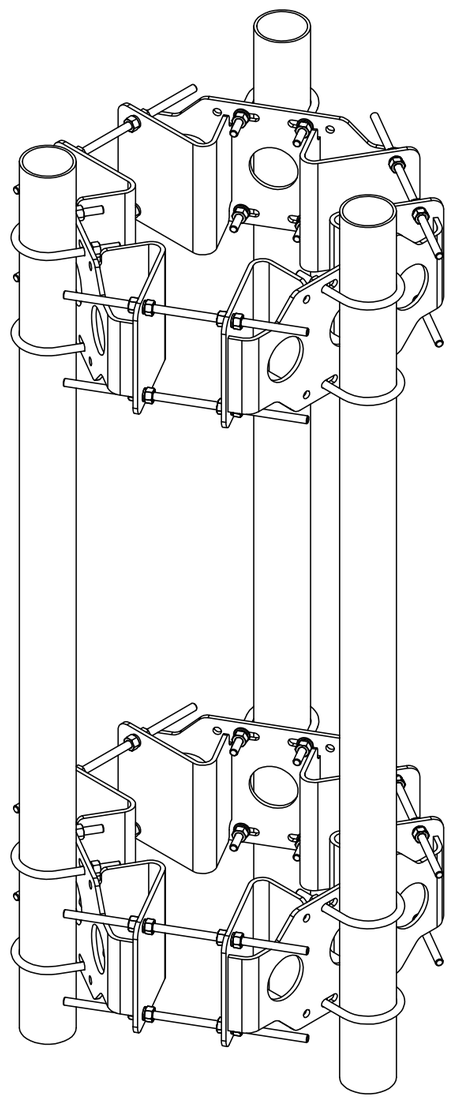

ISOMETRIC VIEW

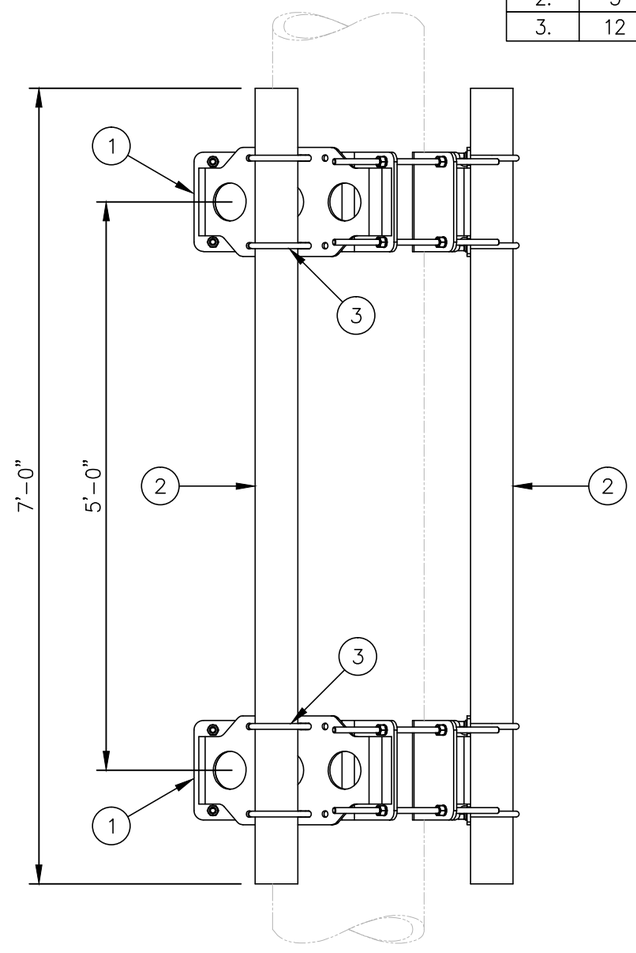

VIEW A-A

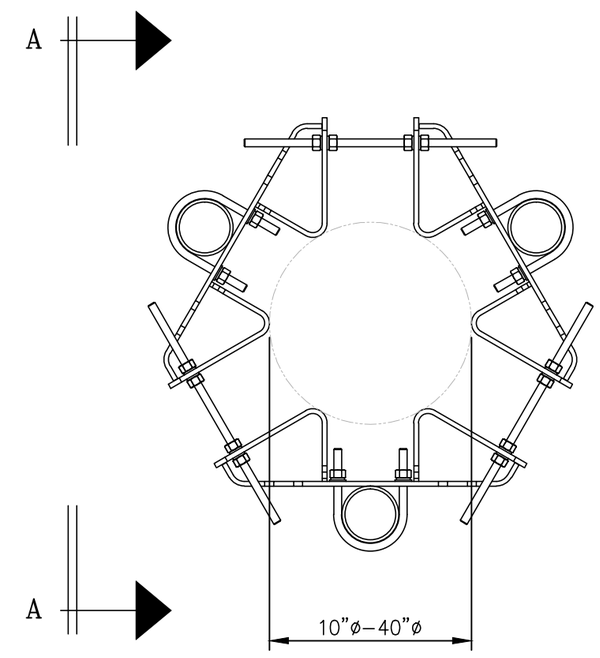

PLAN VIEW

UNLESS OTHERWISE SPECIFIED
ALL DIMENSIONS INCLUDE
FINISHES AND ARE IN INCHES

TOLERANCES: FRACTIONS ± 1/16"
ANGLES ± 1/2 DEG.
DECIMALS ± .010"

MATERIAL:

TOLERANCES DO NOT APPLY
TO RAW MATERIAL

REV	DATE	DRW	CHK	DESCRIPTION
1	02/03/17	WRF	KLE	COLLAR WAS C10112300

Sabre Industries™
Towers and Poles

CONFIDENTIAL

This document and the information contained herein is the confidential trade secret property of Sabre Communications Corporation ("Sabre") and must not be reproduced, copied or used, in whole or in part, for any purpose without the prior written consent of Sabre.
© 2016 Sabre Communications Corporation. All rights reserved.

4 1/2" O.D. PIPE MOUNT ASSEMBLY
FOR MONOPOLES
(FITS 10" TO 40" DIAMETER)

		SIZE	DRAWING NO.	REV
DATE	01/26/16	B	C10899050	1
DRAWN BY	WRF			
CHECKED BY	DLW		SCALE None	PAGE 1 OF 1