C10180101 LIST OF MATERIAL FOR STANDOFF BRACKET				
ITEM	QTY.	PART NO.	DESCRIPTION	WEIGHT
1.	1	CW00592	WELDMENT, STANDOFF BRACKET	3#
2.	2	CS01662	PLATE, BACK-UP	2#
3.	4	C40140003	BOLT ASSEMBLY, 1/2 ø X 5 A307 (FULL THREAD)	2#
			TOTAL WEIGHT	7#

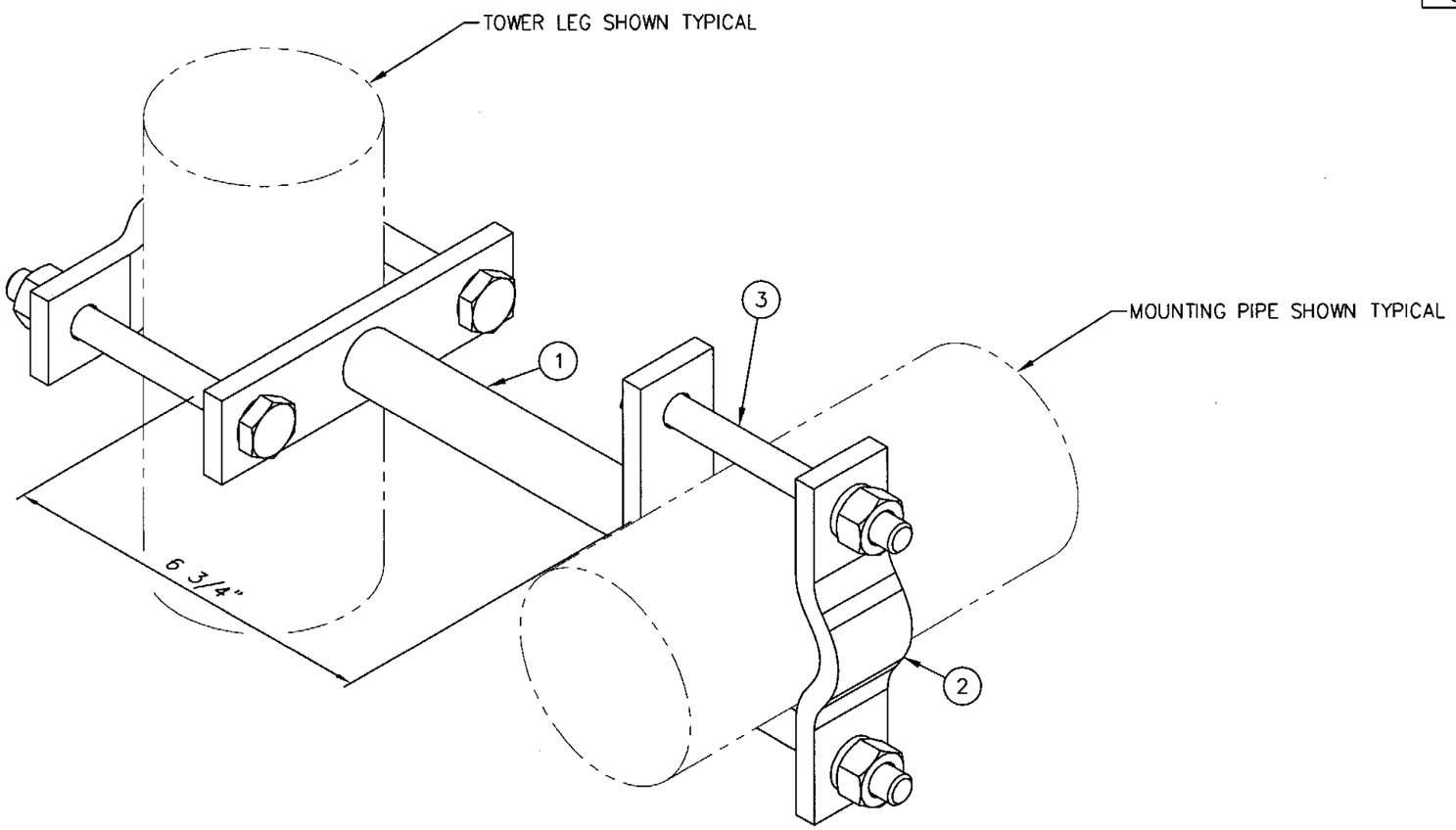

ISOMETRIC VIEW

UNLESS OTHERWISE SPECIFIED
ALL DIMENSIONS INCLUDE
FINISHES AND ARE IN INCHES

TOLERANCES: FRACTIONS ± 1/16"
ANGLES ± 1/2 DEG.
DECIMALS ± .010"

MATERIAL:

TOLERANCES DO NOT APPLY
TO RAW MATERIAL

REV	DATE	DRW	CHK	DESCRIPTION

Sabre Communications Corporation ™

CONFIDENTIAL
Information contained herein is the sole property of Sabre Communications Corporation, constitutes a trade secret as defined by Iowa Code Ch. 550 and shall not be reproduced, copied or used in whole or in part for any purpose whatsoever without prior written consent of Sabre Communications Corporation.

STANDOFF BRACKET
(1 1/4"ø TO 3 1/2"ø ROUND)

		SIZE	DRAWING NO.	REV
DATE	1/2/08	B	C10180101	0
DRAWN BY	MLC			
CHECKED BY	MC		SCALE None	PAGE 1 OF 1

Distributed By
Rosenberger
Rosenberger Site Solutions, LLC
Call 1.866.598.5250 or visit www.RLSS.us